care is required. The ball requires spinning for approximately five hours at a pressure one decade lower than the lowest pressure to be measured in order to achieve equilibrium and obtain a precise measurement of the residual drag [27]. Even after that measurement, the residual drag must be measured frequently during use. At high pressures, the rate at which the ball velocity decreases is a constant and is determined by the properties of the (viscous) gas in which it is immersed. This rate has been calculated to be 50 Pa, but the real device becomes non-linear above 0.1 Pa. Algorithms contained within commercial instruments attempt to correct for this non-linearity and thermal changes introduced at high pressure. With refined algorithms the gauge can measure pressures of 100 Pa (1 Torr) to ±1% [28]; it can measure pressures of ~1000 Pa (10 Torr) with less accuracy.

The spinning rotor gauge is an excellent instrument when used by a trained operator in a laboratory setting. It is the instrument of choice for calibrating other indirect gauges within its pressure range; it can be used by a skilled operator to identify gas mixture problems.

5.2.3 Ionization Gauges

In the high and ultrahigh vacuum region, where the particle density is extremely small it is not possible, except in specialized laboratory situations, to detect the minute forces that result from the direct transfer of momentum or energy between the gas and a solid wall. For example, at a pressure of 10^{-8} Pa the particle density is only $2.4\times10^{12}/m^3$. This may be compared with a density of $3\times10^{22}/m^3$ at 300 K, which is required to raise a column of mercury 1 mm. Even a capacitance manometer cannot detect pressures lower than 10^{-4} Pa.

In the region below 10^{-3} Pa, pressure is measured by ionizing gases, then counting and amplifying the ion signal. Each ionization gauge has its own lower pressure limit at which the ionized particle current is equal to a residual or background current. Ionization gauges normally used in the high vacuum region have a background limit of ~10^{-8} Pa (10^{-10} Torr). Both hot and cold cathode gauges have been developed for pressure measurement. Each technique has its own operating range, advantages, and disadvantages.

Hot Cathode Gauges

The operation of the ion gauge is based on electron impact ionization. The ionized molecular current to the collector electrode is proportional to pressure, provided that all other parameters, including temperature, are held constant. The number of positive ions formed is actually proportional to the number density, not the pressure; the ion gauge is not a true pressure

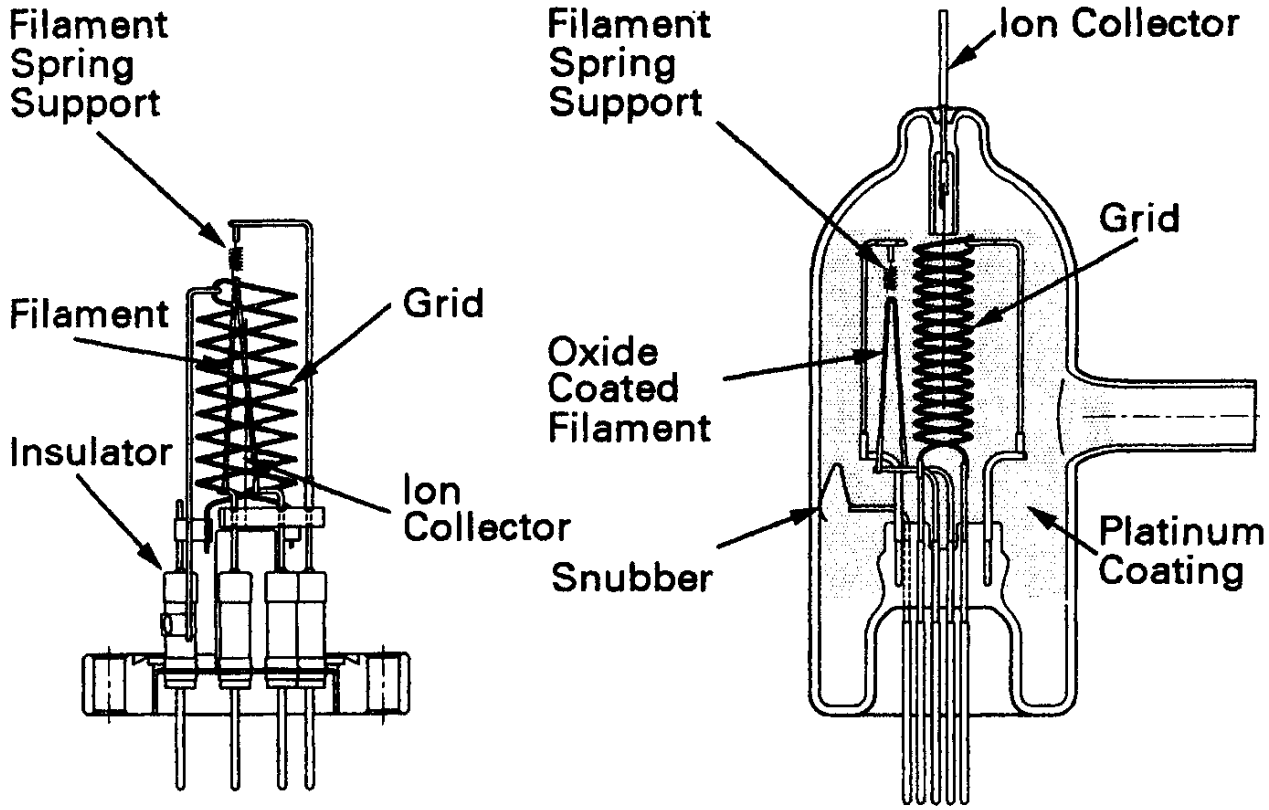

Fig. 5.11 Cross sectional views of two Bayard-Alpert sensors. Left: Bakeable, flange-mounted nude gauge. Right: Glass-encapsulated gauge. Reprinted with permission from Televac/ETI, a Fredericks Company, 2400 Philmont Ave., Huntingdon Valley, PA 19006.

measuring instrument, but rather it is a particle-density gauge. Its reading is proportional to pressure only when the temperature is constant.

The earliest form of ion gauge, the triode gauge, consisted of a filament surrounded by a grid wire helix and a large-diameter, solid cylindrical ion collector. This gauge, which is not illustrated here, looked a lot like a triode vacuum tube. Electrons emitted by the heated filament were accelerated toward the grid wire, which was held at a positive potential of about 150 V. The large area external collector was biased about –30 V with respect to the filament; it collected the positive ions generated in the space between the filament and the ion collector. This gauge recorded pressures as low as 10^{-6} Pa; it would not give a lower reading, even if indirect experimental evidence indicated the existence of lower pressures. Further progress was not made until after 1947, when Nottingham [29] suggested that the cause of this effect was x-ray-generated photocurrent. Nottingham proposed that soft x-rays generated by the electrons striking the grid wire collided with the ion collector cylinder and caused photoelectrons to flow from the collector to the grid. Some photo emission is also caused by ultraviolet radiation from the heated filament. As they leave the collector, these photoelectrons produce a current in the external circuit, which is not distinguishable from the positive ion flow toward the ion collector, and mask the measurement of reduced pressures.

In 1950 Bayard and Alpert [11] designed a gauge in which the large area collector was replaced with a fine wire located in the center of the grid (Fig. 5.11a). Because of its smaller area of interception of x-rays, this gauge could measure pressures as low as 10^{-8} Pa. Today this gauge is the most popular design for the measurement of high vacuum pressures.

The proportionality between the collector current and pressure is given by

$$i_c = S' i_e P$$

or

$$P = \frac{1}{S'} \frac{i_c}{i_e} \qquad \blacktriangleright(5.4)$$

where i_c and i_e are the collector and emission currents, respectively, and S' is the sensitivity of the gauge tube. This sensitivity has dimensions of reciprocal pressure, which in SI is 1/Pa. The sensitivity is dependent on the tube geometry, grid and collector voltages, the type of control circuitry, and the nature of the gas being measured. For the standard Bayard-Alpert tube with external control circuitry, a grid voltage of +180 V, and filament bias voltage of +30 V, the sensitivity for nitrogen is typically 0.07/Pa. See Fig. 5.12. Variations in tube design, voltage, and control circuitry can cause it to range from 0.05-to-0.15/Pa. The tube's sensitivity for other gases varies with ionization probability. Alpert [30] suggested that the relative sensitivity (the ratio of the absolute sensitivity of an unknown gas to nitrogen) should be independent of structural and electronic variations and therefore be more meaningful to tabulate than absolute sensitivity.

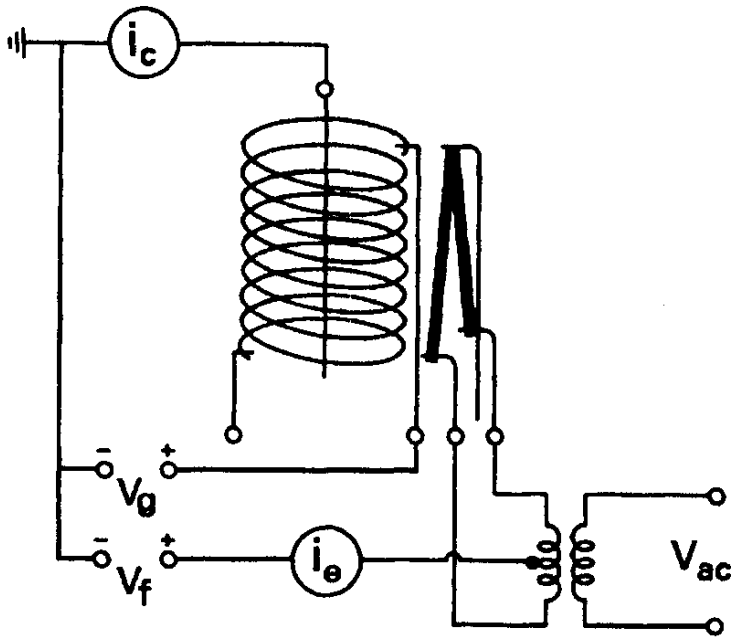

Fig. 5.12 Control circuit for a Bayard-Alpert ionization gauge tube.

Table 5.1 Approximate Relative Sensitivity of Bayard-Alpert Gauge Tubes to Different Gases[a]

Gas	Relative Sensitivity
H_2	0.42–0.53
He	0.18
H_2O	0.9
Ne	0.25
N_2	1.00
CO	1.05–1.1
O_2	0.8–0.9
Ar	1.2
Hg	3.5
Acetone	5

Source: Adapted with permission from *J. Vac. Sci. Technol.*, **8**, p 661, T. A. Flaim and P. D. Owenby. Copyright 1971, The American Vacuum Society.
[a] The pressure of any gas is found by dividing the gauge reading by the relative sensitivity.

The relationship between the pressure of an unknown gas $P(x)$ and the meter reading is

$$P(x) = \frac{S(N_2)}{S(x)} P(\text{meter reading}) \tag{5.5}$$

or after normalizing the gas sensitivities, by dividing each sensitivity by that of nitrogen: $S(x)_{\text{relative}} = S(x)/S(N_2)$ we obtain

$$P(x) = \frac{P(\text{meter reading})}{S(x)_{\text{relative}}} \qquad \blacktriangleright(5.6)$$

By use of (5.6) and Table 5.1 [31] the pressure of gases other than nitrogen can be measured with an ion gauge, even though all ion gauges are calibrated for nitrogen.

Gauge sensitivity is often given in units of microamperes of collector current per unit of pressure per manufacturer's specified emission current; for example, a typical nitrogen sensitivity is (100/μA/mTorr)/10 mA. This is a confusing way of saying the sensitivity is 10/Torr, but it does illustrate an important point; not all gauge controllers operate with the same emission current and not all gauge tubes have the same sensitivity. Checking the instruction manual can avoid potential embarrassment.

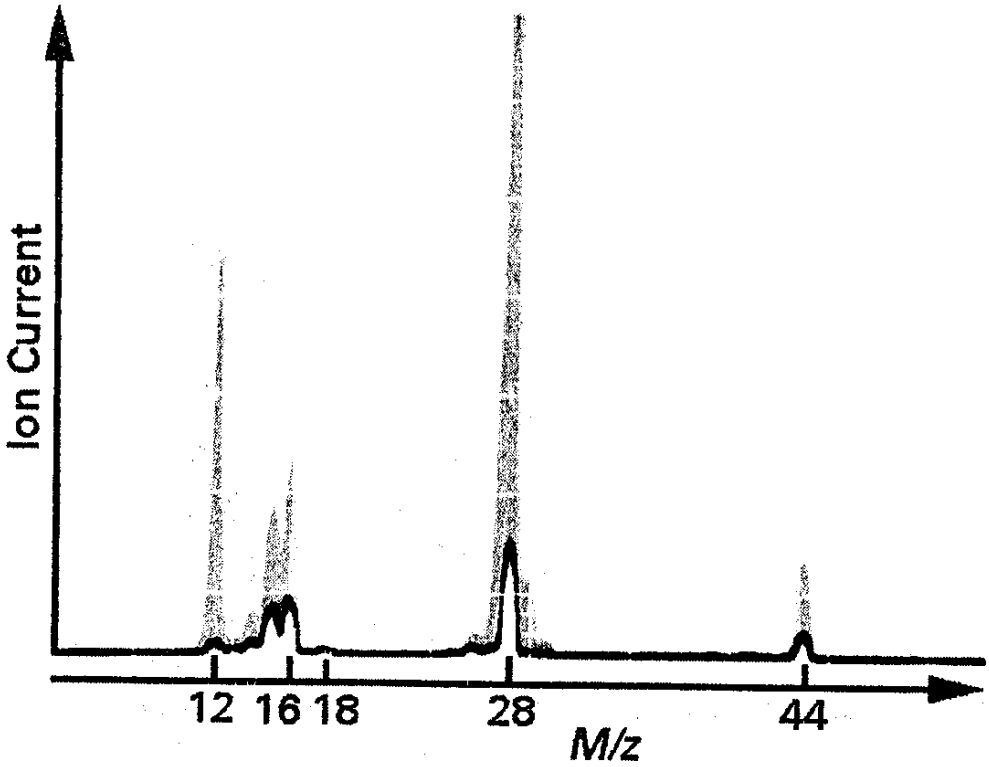

Fig. 5.13 Transient desorption during degassing a glass-encapsulated Bayard-Alpert ion gauge tube as recorded by a storage tube oscilloscope. The gray traces indicate the transient release of carbon monoxide along with some methane and carbon dioxide on grid heating. The solid black line represents the background spectrum.

The classical control circuit is designed to stabilize the potentials and emission current while measuring the plate current. The plate current meter is then calibrated in appropriate ranges and units of pressure. The accuracy of the gauge is dependent in part on moderately costly, high-quality, emission current regulation.

Tungsten and thoriated iridium (ThO_2 on iridium) are two commonly used filament materials. Thoriated iridium filaments are not destroyed when accidentally subjected to high pressures—an impossible feat with fine tungsten wires—but they do poison in the presence of some hydrocarbon vapors. The remarks in Section 8.2 about filament reactivity with gases in the residual gas analyzer ionizer also pertain to the ion gauge.

Ion gauge grids are outgassed by direct or electron bombardment heating. The grid wire can be directly heated by connecting it to a low-voltage, high-current transformer. Alternatively, the grid and plate wire can be connected to a high-voltage transformer and heated by electron bombardment. It is best to wait until the pressure is on a suitably low scale ($\sim 10^{-4}$ Pa) before outgassing. An unbaked glass encapsulated gauge should be outgassed until the glass has desorbed. (The pressure may be monitored during outgassing of gauges with resistance-heated grids.) The time for this initial outgassing is variable, but 15–20 min is typical. After the initial outgassing the tube should be left on. Subsequently, only short outgassing

times, say 15 s, are periodically needed to clean the electrodes. Figure 5.13 illustrates the gas release from a grid during electron bombardment. Notice the large transients at M/z = 28, 16, 12, and to a lesser extent, 44. This identifies the desorbed gases as CO, CO_2 and some CH_4. If the outgassing power supply is inadequately designed, desorption will not be complete [32]; see the discussion of electron stimulated desorption in the following subsection.

Extending the operating region of the hot cathode gauge below 10^{-8} Pa (10^{-10} Torr) is not so easy. Few ultrahigh vacuum hot cathode gauges are commercially available at the time of this writing. This presents a problem to designers and users of state-of-the-art UHV advanced vacuum processing systems that require ultrahigh vacuum base pressures. The Extractor gauge [12] and uhv-24 Bayard-Alpert sensor and are two commercially available ultrahigh vacuum gauges. The modulated Bayard-Alpert gauge is worthy of reconsideration. The efficient Bayard-Alpert design, known as the uhv-24, increased the sensitivity of the gauge tube by capping the end of the grid to prevent electron escape [33]. It reduced the x-ray limit by use of a fine, 125-μm-diameter collector wire. This sensor has a sensitivity of 0.15/Pa (20/Torr) [34]. It is mounted on a 70-mm-diameter metal flange and can be baked to 450°C. See Fig. 5.11 (left). One Extractor gauge is illustrated in Fig. 5.14. The hemispherical ion reflector, maintained at grid potential, reflects ions to the collector wire. The sensitivity of a similar IE511 gauge

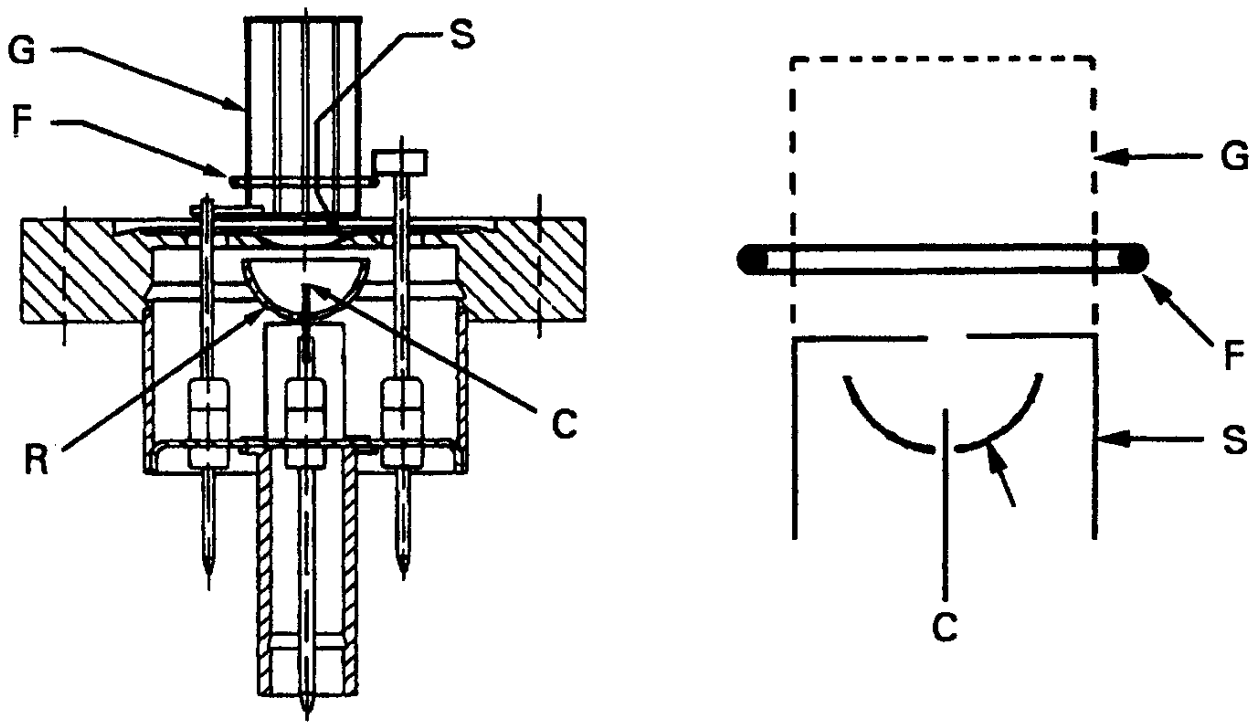

Fig. 5.14 IE514 Extractor gauge. Left: Sensing head. Right: Expanded detail of the electrode structure. G, grid; F, filament; S, suppressor; R, reflector; C, collector. Reprinted with permission from INFICON AG, 9496 Balzers, Liechtenstein

tube was reported as 0.045/Pa (6/Torr) [35]. It is a stable gauge with a low x-ray limit. It is less sensitive to electron-stimulated grid desorption than a standard Bayard-Alpert Gauge.

The modulated Bayard-Alpert gauge was constructed like a standard Bayard-Alpert gauge, but had a modulator wire located within the grid region [36]. When a potential was applied to the modulator wire located that equaled that of the collector, some of the gas phase ion flux was diverted to the modulator and the collector current decreased. However, the x-ray-generated charge flow remained constant. By measuring this fractional decrease at pressures far above the x-ray limit, the modulation factor was determined and the gauge calibrated. Its sensitivity was measured to be 0.9/Pa (12/Torr) [37].

Hot Cathode Gauge Errors

Despite its deceptively simple operating principle, measurement of pressure in the ultrahigh vacuum region with a hot cathode gauge must be done with considerable care. Numerous effects can alter the indicated ion current [32,38,39]. The previously described x-ray generated photocurrent, electron-stimulated grid (and ion collector) desorption, wall outgassing caused by thermal heating from the hot cathode, chemical effects on heated cathodes, controller errors, wall diameter, and cathode evaporation can each introduce measurement error.

Historically, the most attention has been paid to reducing the x-ray limit; it was the most significant limiting factor; indeed it remains a concern. The uhv-24 sensor has x-ray limit of 4×10^{-9} Pa (2.8×10^{-11} Torr) [34]. The Leybold IE511 was found to have an x-ray limit of 2×10^{-10} Pa (1.5×10^{-12} Torr) [35], whereas its original version had an x-ray limit 25 times less [38]. The modulated Bayard Alpert gauge was shown to have an x-ray limiting pressure of 9×10^{-9} Pa (7×10^{-12} Torr) [37].

Electron-stimulated desorption is a significant, but a variable and an unpredictable source of error; in many cases ESD errors can be significantly larger than those caused by x-rays. Electrons striking the grid and ion collector release previously adsorbed gases. Prior exposures to oxygen results in desorption of CO formed by a reaction of dissociated oxygen and carbon impurities in metals. Other studies point to enhanced ESD in systems containing small amounts of water vapor or other oxygen containing gases. Using optical metrology (with no heated filaments), Looney [40] has demonstrated ESD of carbon monoxide from Bayard Alpert gauges and RGA sensors. Figure 5.15 illustrates the decrease and increase of the CO signal as hot filaments in the RGA and Bayard-Alpert gauges were first turned off, then on. The instantaneous change in signal levels indicated that CO released from surfaces was not due to the slow

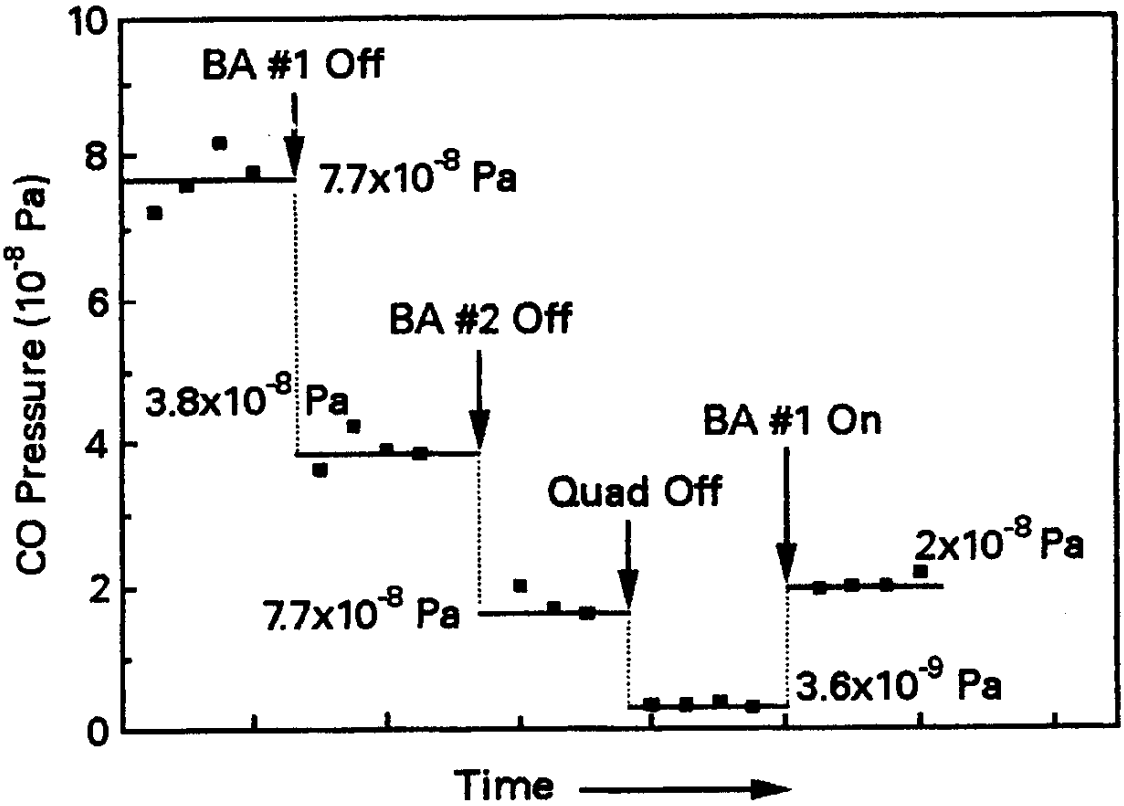

Fig. 5.15 Carbon monoxide concentration in an ultrahigh vacuum system as measured optically (no hot filament). The CO partial pressure is seen to decrease as hot filament devices are turned off. Reprinted with permission from *J. Vac. Sci. Technol. A*, **11**, p. 3111. J. P. Looney, J. E. Harrington, K. C. Smyth, T. R. O'Brian, and T. B. Lucatorto. Copyright 1993, AVS–The Science and Technology Society.

heating or cooling of nearby surfaces. For decades, many researchers have inferred CO to be an artifice of hot filaments and not a true ultrahigh vacuum background gas. These data unambiguously confirm our earlier suspicions. Kendall [32] observed that ESD disappeared when a Bayard-Alpert grid was heated above ~800 K. He concluded that gases could not adsorb on grids at this temperature. Watanabe's careful ESD measurements agree [39]. Figure 5.16 shows the magnitude of the ESD signal in an experimental gauge capable of distinguishing gas phase ions from their energetically different ESD counterparts. Since some new ionization gauge controllers operate at emission currents of 4 mA or less, they may not heat the grid to a sufficiently high temperature to prevent ESD. There was a reason ionization gauges were designed to operate at 10 mA; a reason which may have been forgotten.

Wall outgassing caused by heating of the gauge walls, or surfaces near nude gauges, will introduce measurement errors. Watanabe noted that stainless steel, surrounding a typical ultrahigh vacuum gauge, had two undesirable characteristics—high emissivity and low thermal conductivity. The nearby walls are hot, because they absorb heat easily and dissipate it poorly. Watanabe used these concepts to construct an experimental gauge

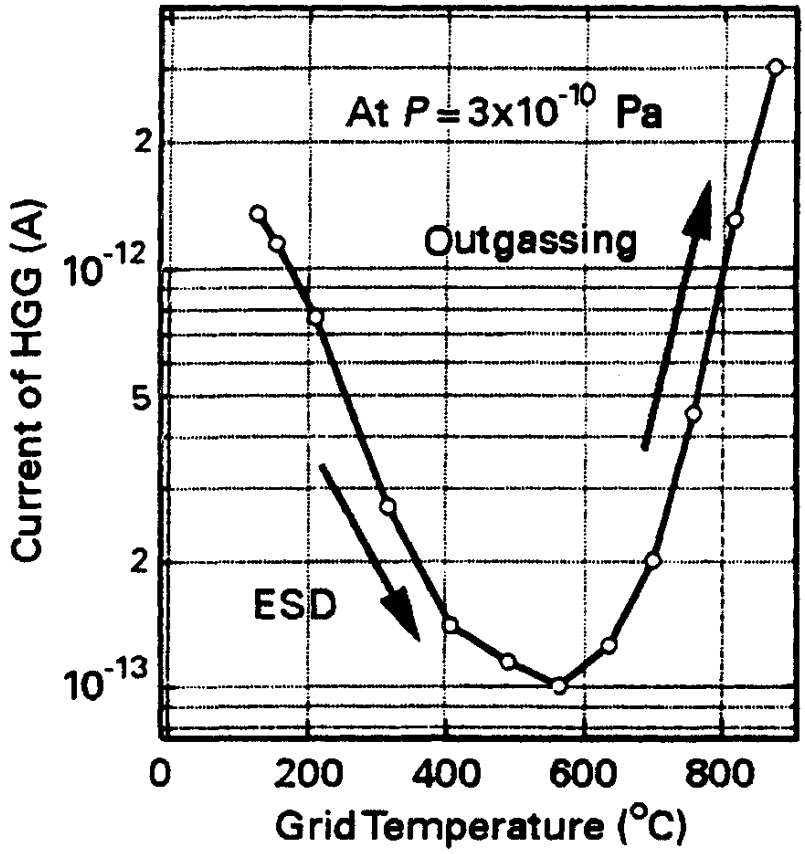

Fig. 5.16 Ion current versus grid temperature in a hot cathode UHV ion gauge. Electron stimulated desorption of the grid decreases with temperature up to a temperature of ~800 K. The increased signal at high grid temperatures is believed to be caused by the outdiffusion of hydrogen from the grid wire. Reprinted from *Vacuum*, **53**, F. Watanabe, 151–157, copyright 1999, with permission from Elsevier.

using a gold-plated copper fixture, which operated with reduced heater power and reduced wall outgassing [40].

Kendall observed that mounting flange virtual leaks and dimensional manufacturing tolerances, as well as inaccurate electrometer and voltage divider resistors contributed to gauge error [32]. Surface chemical effects can synthesize ions not part of the system background. The gauge envelope is also part of the measurement circuit. Glass charges to a floating potential. Redhead demonstrated that the sensitivity factor for a Bayard-Alpert gauge was strongly dependent on the filament distance and the electric fields near the filament [42]. The diameter of the glass or metal envelope affects electron orbits [43]. Filippelli demonstrated that envelope diameter changes could produce sensitivity changes as large as 50% with some Bayard-Alpert sensors [44]. He found that extractor gauges were less susceptible to wall diameter changes, because of the sensor's low profile—much of the gauge was located within its mounting flange.

Measurement of pressure in the ultrahigh vacuum range requires care; it is essential that those who are serious about this subject begin by reading papers by Kendall [32], Redhead [38] and Watanabe [39].

Cold Cathode Gauge

The cold cathode gauge, developed by Penning in 1937 [13], provides an alternative to the hot cathode gauge, which in many respects is superior to a Bayard-Alpert gauge. A commercial sensor tube is illustrated in Fig. 5.17. This gauge is based on the inverted magnetron geometry [45]. The arrangement of the electric and magnetic fields causes electrons to travel long distances in spiral paths before finally colliding with the anode. Long electron trajectories enhance the ionization probability and improve sensitivity. The discharge begins when one electron or ion gains sufficient energy to ionize a gas molecule. The electron density increases until it is space charge limited. The time required for a gauge to reach steady state decreases as pressure increases. This can be described by a starting parameter, typically of order 50–500 μPa-s (0.5–5 μTorr-s) for gauges without auxiliary starting sources [46]. Starting the gauge at low pressures can be difficult unless the gauge contains an auxiliary source; radioactive sources, photo emitters, hot filaments, and field emitters have been used to provide additional starting electrons. The range of operation of the cold

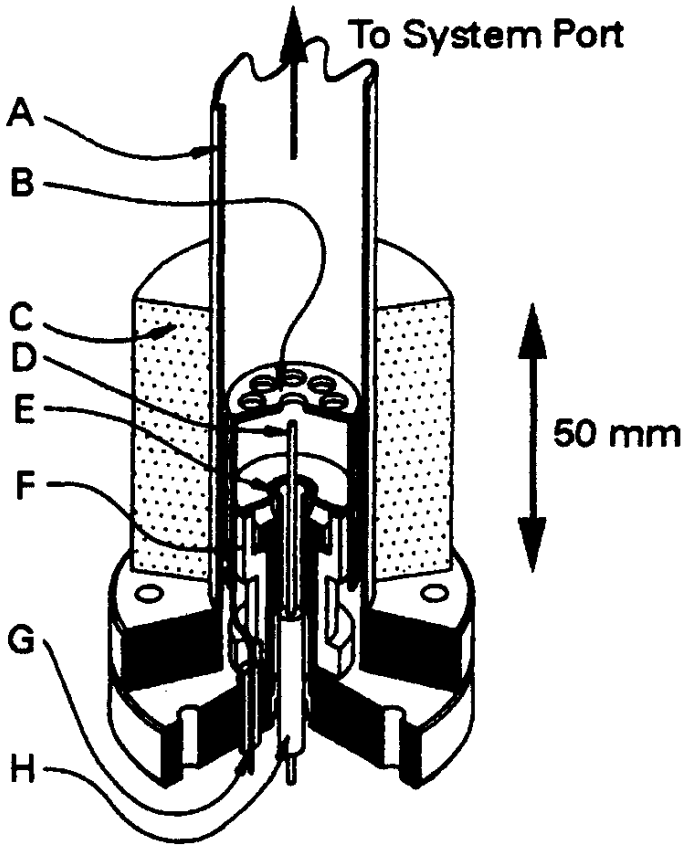

Fig. 5.17 Cold cathode gauge: A, envelope; B, cathode; C, magnet; D, anode; E, guard electrode; F, ceramic support; G, cathode current feedthrough; H, high voltage feedthrough. Reproduced with permission from *J. Vac. Sci. Technol. A*, **9**, p. 1977, R. N. Peacock, N. T. Peacock, and D. S. Hauschulz. Copyright 1991, AVS–The Science and Technology Society.

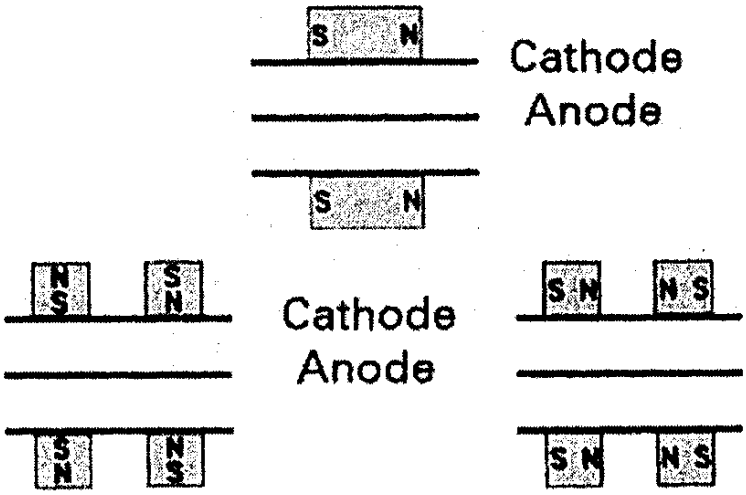

Fig. 5.18 Simplified view of the magnet configurations in modern inverted magnetron cold cathode gauges. Top: Conventional single inverted magnetron. Lower left: Radial double magnets. Lower right: Axial double magnets. Reprinted with permission from *J. Vac. Sci. Technol. A*, **18**, p. 1724. B. R. F. Kendall and E. Drubetsky. Copyright 2000, AVS–The Science and Technology Society.

cathode gauge is 1–10^{-9} Pa (10^{-2}–10^{-11} Torr). It is a viable option to the hot cathode gauge for systems with 10^{-9}-Pa-range base pressures, if it is not mounted immediately adjacent to a hot cathode gauge or residual gas analyzer. Cold and hot cathode gauges have sensitivities that vary with gas species and in a similar manner. Like hot cathode gauges, cold cathode gauges measure gas density. Unlike hot cathode gauges, they have no x-ray limit and have little electron-stimulated desorption or thermally induced wall outgassing; they do not have filaments to change. Gas release from a cold cathode gauge was observed after the gauge had been contaminated [47]. The magnetic field surrounding a cold cathode gauge is a concern in some applications. Fringing fields have been reduced with alternative magnetic configurations [46]. Figure 5.18 illustrates a conventional and two "double magnetron" designs; one uses opposing radial magnets whereas the other uses opposing longitudinal magnets.

Cold cathode gauges can pump; however, their pumping speeds have been found similar to those of a hot cathode gauge [48]. They should not be connected to a system with tube of a smaller diameter or a pressure drop will result. Cold cathode gauges should be mounted in a way that will not allow metal particles to fall inside the tube.

Gauge Calibration

Direct comparison, static expansion, and continuous expansion are techniques used to calibrate high vacuum gauges against primary standards. Direct comparison is performed by comparing standard and

unknown gauges on the same chamber. The static expansion method uses Boyle's law to calculate the known quantity of gas, as it expands from one chamber to a second. By repeating this process, successively lower pressures can be reached. In the continuous expansion method, gas from a vessel of known pressure flows to a calibration chamber through an orifice of known size. From the calibration chamber, the gas flows through another known orifice into the pump. Knowing the dimensions of the calibration chamber, the temperature, and the difference between the two flow rates, one can calculate the pressure of the intermediate chamber. Series expansion is claimed to be the most accurate method [49]. The AVS Standards [50], published in 1969, described direct calibration of ion gauges only to a low-pressure value of 10^{-3} Pa (10^{-5} Torr). German standards were adopted in 1976, whereas an ISO draft was published in 1974 [51]. Calibration must be done with care. The equipment necessary for calibrating high vacuum gauges is usually to be found only in the laboratories of government standards institutions and gauge manufacturers. The average user does not have the resources to calibrate high vacuum gauges, but may wish single point comparison to a secondary standard such as a spinning rotor gauge or a capacitance manometer. Ion gauges have been found to be linear to low pressures [52], so that direct comparison with a standard in their upper range is valid. Cold cathode gauges often exhibit a small "kink" in their response current–pressure response at low pressure [48]. Hot cathode gauge tubes tend to be more repeatable than accurate; however, the issues discussed in the previous section can affect accuracy. Reducing errors generated by improper use or mounting can be as significant as calibration.

REFERENCES

1. J. H. Leck, *Pressure Measurement in Vacuum Systems*, 2nd ed., Chapman and Hall, London, 1964.
2. J. P. Roth, *Vacuum Technology*, North-Holland, Amsterdam, 1982.
3. A. Berman, *Total Pressure Measurements in Vacuum Technology*, Academic Press, New York, 1985.
4. D. Alpert, C. G. Matland, and A. C. McCoubrey, *Rev. Sci. Instrum.*, **22**, 370 (1951).
5. J. J. Sullivan, *Ind. Res. Dev.*, January 1976, p. 41.
6. G. Loriot and T. Moran, *Rev. Sci. Instrum.*, **46**, 140 (1975).
7. M. Pirani, *Verhandl. Dent. Physik. Ges.*, **8**, 686 (1906).
8. W. Voege, *Physik Zs.*, **7**, 498 (1906).
9. J. W. Beams, D. M. Spitzer, Jr., and J. P. Wade Jr., *Rev. Sci. Instrum.*, **33**, 151 (1962).
10. J. K. Fremerey, *J. Vac. Sci. Technol.*, **9**, 108 (1972).
11. R. T. Bayard and D. A. Alpert, *Rev. Sci. Instrum.*, **21**, 571 (1950).
12. P. A. Redhead, *J. Vac. Sci. Technol.*, **3**, 173 (1966).
13. F. M. Penning, *Physica*, **4**, 71 (1937).